Hillmar
Hillmar Industries Ltd.
7371 Vantage Way
Delta, BC V4G 1C9
P:604 946-7115 F:604 946-0329
info@hillmar.com www.hillmar.com

CABLE REEL DA-MCGBSRFO DA-GB25DD-15KVFO-ME25-50 SPECIFICATION SHEET SLS & MKTG ENGLISH

Sheet Number:				
Job Number:				
Form Number: 629-862-75948PT				
Company / Project Reference:	Date.:	Page.:	Document Package No.:	Rev.:

Inventor Drawing

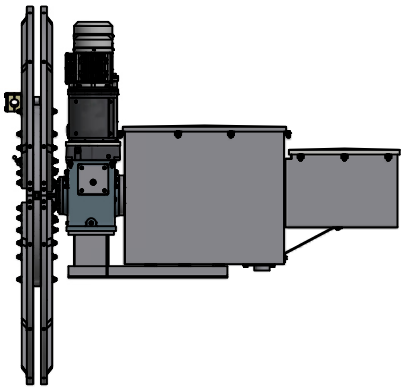

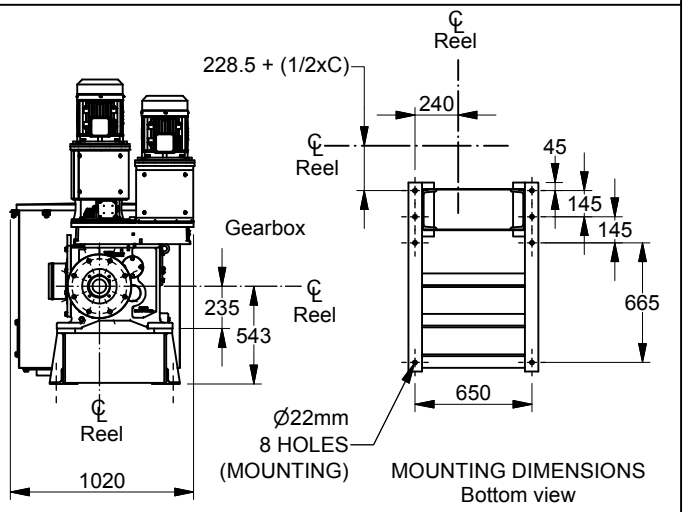

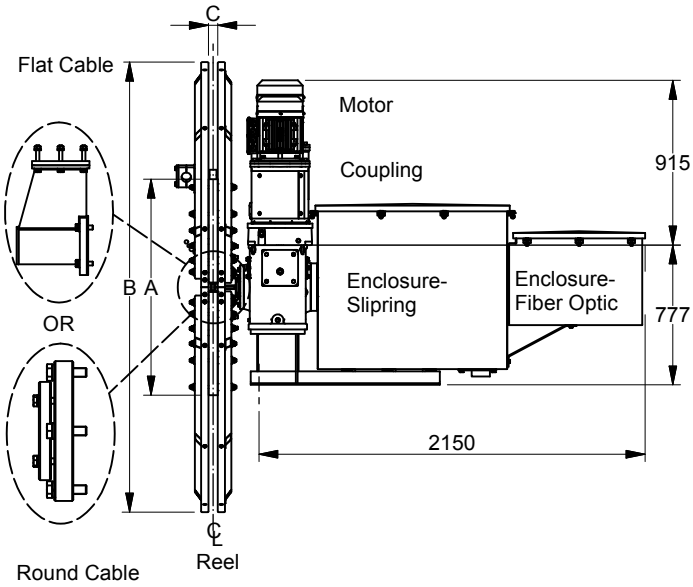

FEATURE	CODE
Drive Assy Power Reel	DA
Gearbox Dual Drive	GB25DD
Voltage	15KV
Fiber Optic	FO
Magnetic Coupling	ME25
Magnetic Coupling Torque Nm	50 (50)

Example for ordering	DA-GB25DD-15KVFO-ME25-50

TECHNICAL DATA

Motor Size	5.5 kW
Spool Sizes Available	2.5m to 6.0m
Gearbox Hollow Shaft	76mm
Gearbox Drive Torque Nm	4000
Gearbox Max Overhang Load	36kN
Slipring Enclosure Design	15kV
Rotary Switch Ratio	RS
Drive Weight Excluding Spool	885kg
Spool Weight	Contract Specific
Mounting Holes	8 x Ø22
Mounting Bolts	8 x M20 GR10.9
Slipring Enclosure	SS304

NOTES

For Other Reel Types refer to one of the following sections:

Flat Cable Reel

Hose Reel

Control Reel

Vector drive Reel

Document Template #710-101-62058

** ALL TECHNICAL DATA IS SUBJECT TO CHANGE WITHOUT NOTICE **
Hillmar works have a fully registered ISO 9001-2008 quality assurance programme (QCB #01-1525)

C:\Vault_Workspace\HILLMAR\HILLMAR PRODUCTION\06 CABLE REEL\CABLE REEL DA\0700-6\07006002 DAPR-MCGBSR\SPC-SHT-DAPR-MCGBSR\75948 DA-GB25DD-15KVFO-ME25-50.idw